IAOM
MIDEAST & AFRICA REGION

IAOM MEA
VIRTUAL TECHNICAL MILLING FORUM
November 2 - 4 , 2021

Plant Maintenance Done Right!

YENAR

rollCare®
profile measurement device

IAOM MEA
VIRTUAL TECHNICAL
MILLING FORUM
November 2 - 4 , 2021
Plant Maintenance Done Right!

YENAR

SEFA YEGIN
AREA SALES MANAGER, YENAR

rollCare Profile Measurement Device

Challenges in the Operation

- In the mills, As the flutes of rolls wear out over time, the millers squeeze them more and try to get as much use out of them as they possibly can. Wearing out flutes affects many parameters in the milling process, such as the yield decreases due to wear, also leading to increased energy consumption and a decrease in product quality.
- Nowadays, most millers determine the time to change the rolls by their own personal experiences with such devices and machinery.
- In some of the mills there are re-fluting machine but you cannot control your operators are re-fluting your own rolls as per your request.

Solution in Maintenance

The **rollCare Profile Measurement Device** is the only one device designed using laser technology in the World that able to check roll profiles condition then allows you to determine the rolls are worn out or not.

rollCare®
profile measurement device

Solution in Maintenance

What Does rollCare device measure?

RollCare measures the sharp angles, dull angles, land, Depth of the corrugations, deepest point radius, pitch and Flute Area of corrugated rolls.

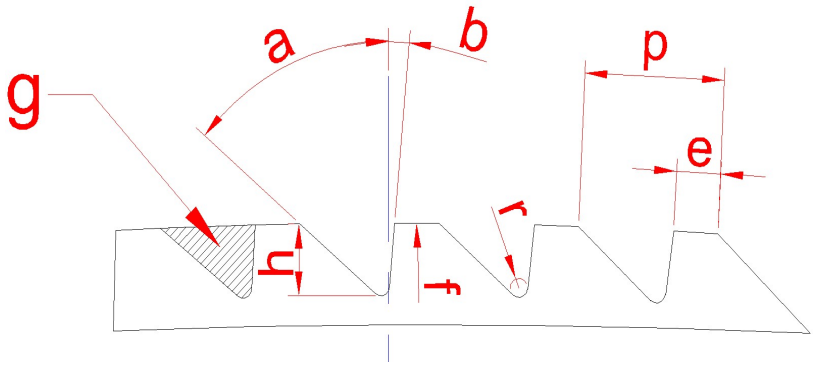

rollCare®
profile measurement device

Technical Feature

- The specifications of rollCare

rollCare®
profile measurement device

IAOM MEA
VIRTUAL TECHNICAL
MILLING FORUM
November 2 - 4 , 2021
Plant Maintenance Done Right!

YENAR

Benefits for a Milling Operation

- Where we are using?

1. You can use it on roller mills as shown Picture.
Millers can measure the profile of rolls while sitting in the comfort of the mill operator’s room, thanks to rollCare’ wireless connectivity and recharge ability

rollCare®
profile measurement device

IAOM MEA
VIRTUAL TECHNICAL
MILLING FORUM
November 2 - 4 , 2021
Plant Maintenance Done Right!

YENAR

Benefits for a Milling Operation

- 2. If you have a fluting machine, you can check the flutes status of various rolls while actively re-fluting rolls.

Benefits for a Milling Operation

- 3. when you order fluted rolls from your roll supplier then you can check them for the profiles are correct or not.

- 4. You can control the carbide's angles before fluting operation, to check whether angles are correct or still need to sharpening or adjustment.

Benefits for a Milling Operation

How rollCare works?

Firstly, rollCare Sticks on the roll with Magnets. Device transfers via wireless the roll profile to the computer. Specially designed software allows you to measure easily all the parameters required.

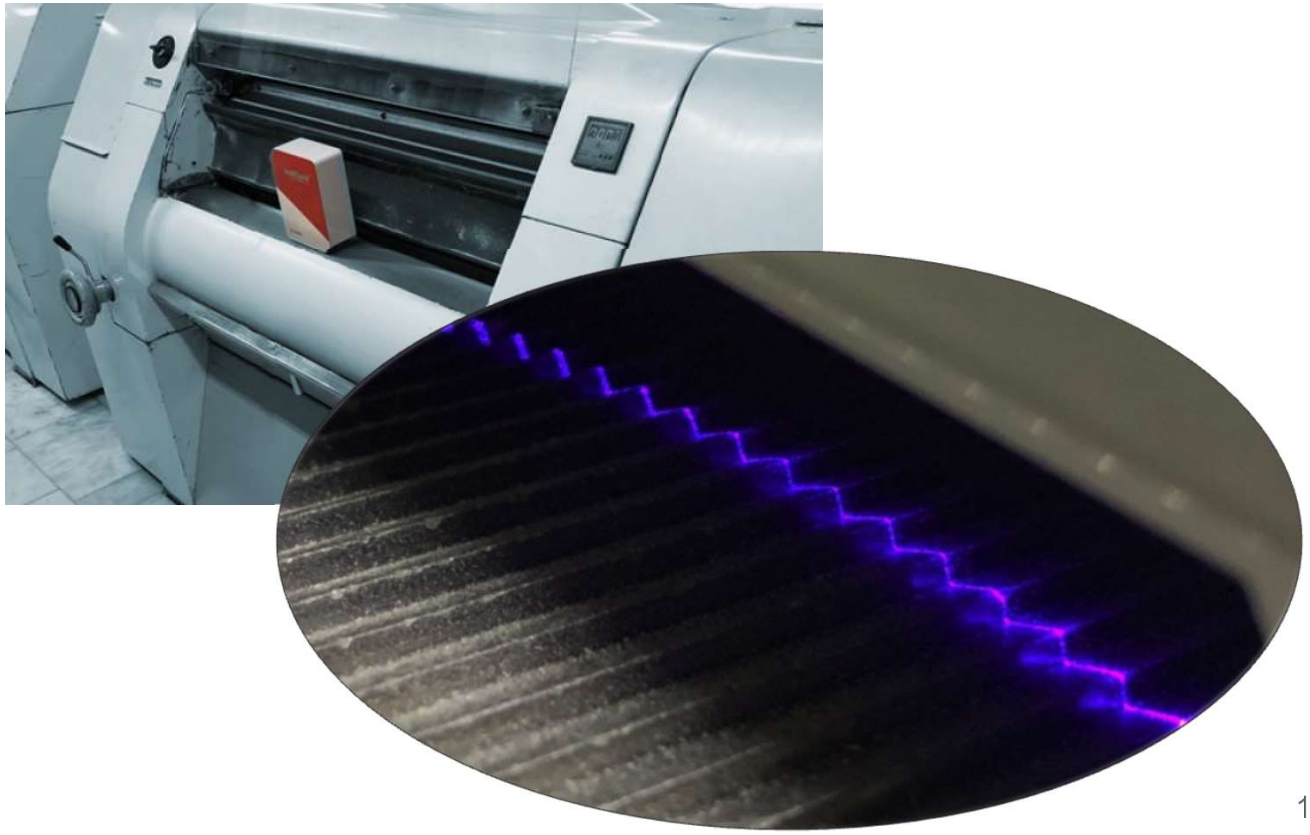

YENAR

Technical Feature

Here you can see the actual profile of new fluted roll. This transferred from laser to pc.

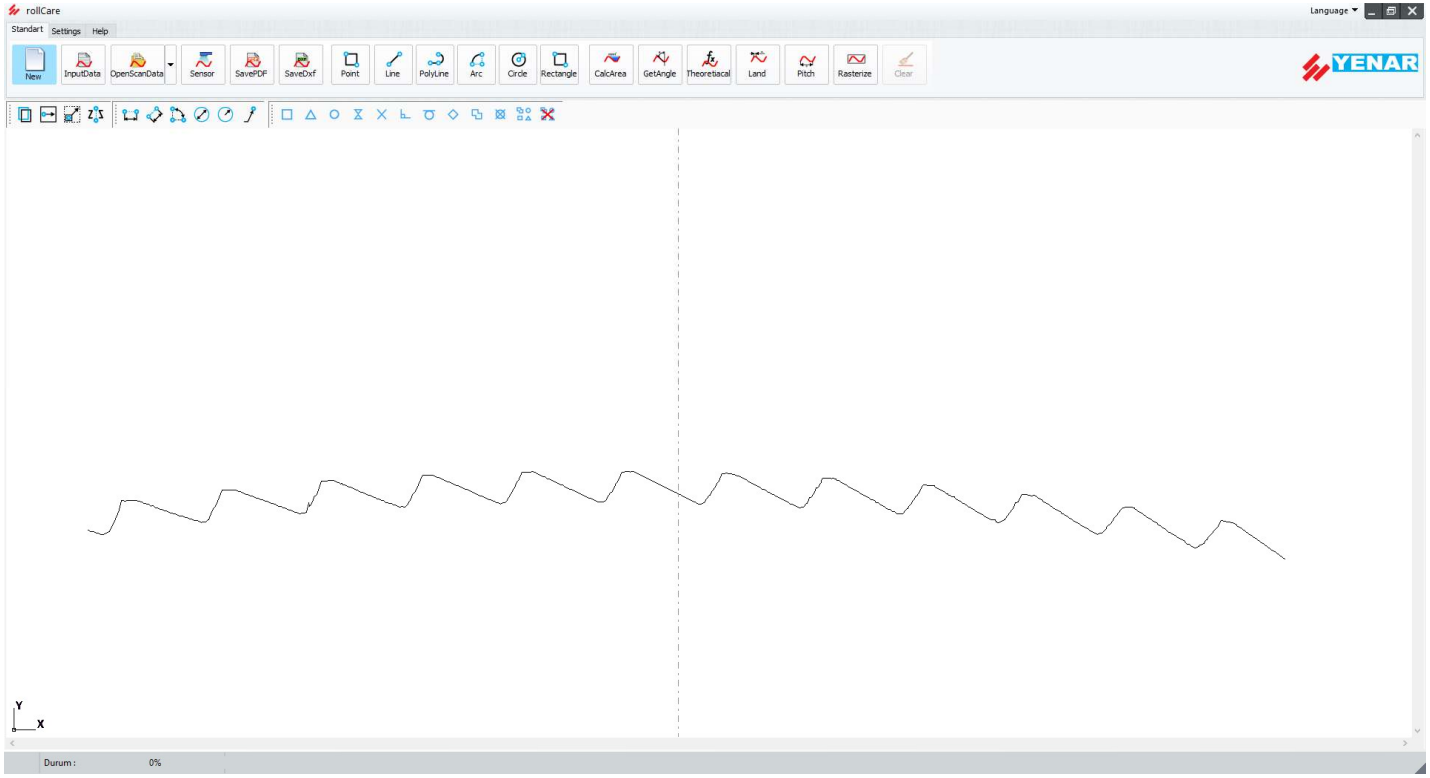

rollCare®
profile measurement device

YENAR Technical Feature

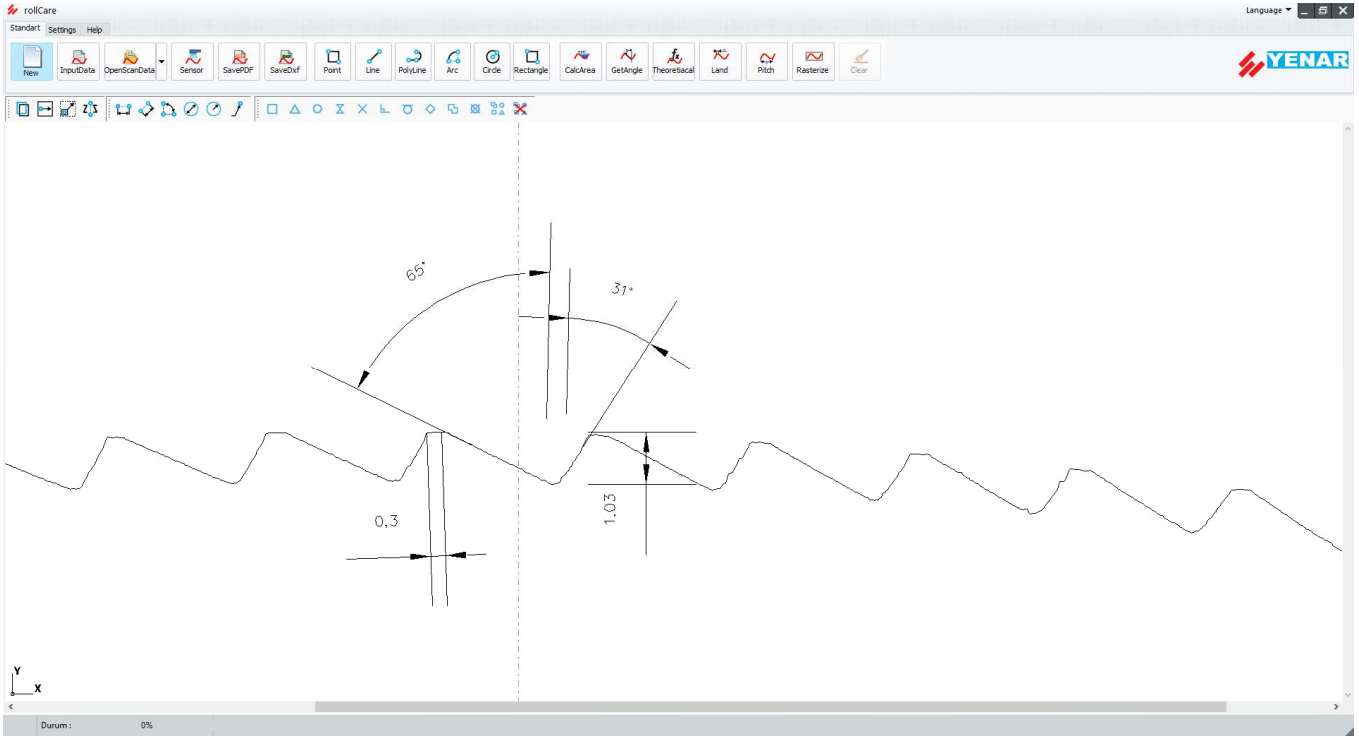

In this picture there is a measured profile and specially designed software allow you to measure easily all the parameters required with tollbars such as get angles, calculation the depth, land and pitch

rollCare®
profile measurement device

Technical Feature

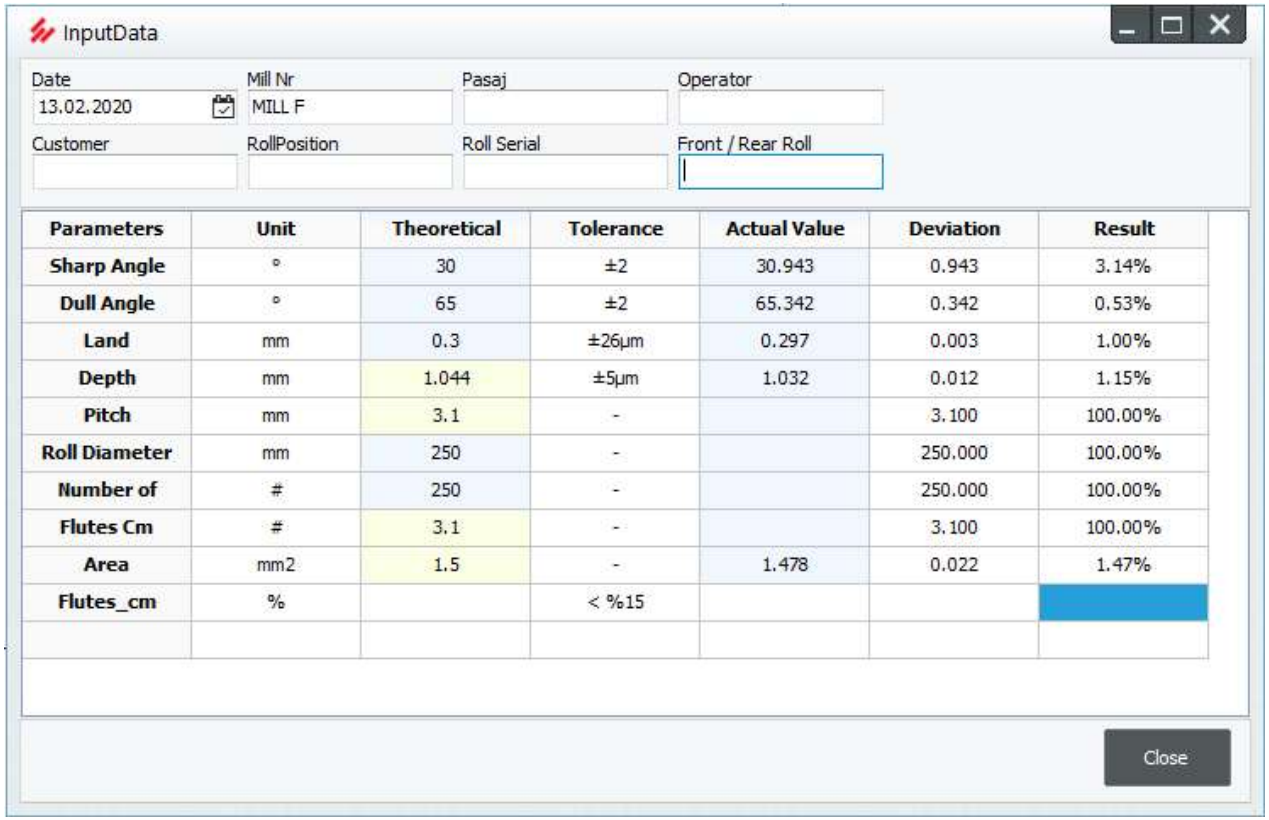

Parameters	Unit	Theoretical	Tolerance	Actual Value	Deviation	Result
Sharp Angle	°	30	±2	30.943	0.943	3.14%
Dull Angle	°	65	±2	65.342	0.342	0.53%
Land	mm	0.3	±26µm	0.297	0.003	1.00%
Depth	mm	1.044	±5µm	1.032	0.012	1.15%
Pitch	mm	3.1	-		3.100	100.00%
Roll Diameter	mm	250	-		250.000	100.00%
Number of	#	250	-		250.000	100.00%
Flutes Cm	#	3.1	-		3.100	100.00%
Area	mm2	1.5	-	1.478	0.022	1.47%
Flutes_cm	%		< %15			

Users then need to input manually the theoretical flow sheet of the rolls they wish to analyze then the program automatically draws a graph of the profile and overlaps both profile

rollCare®
profile measurement device

Technical Feature

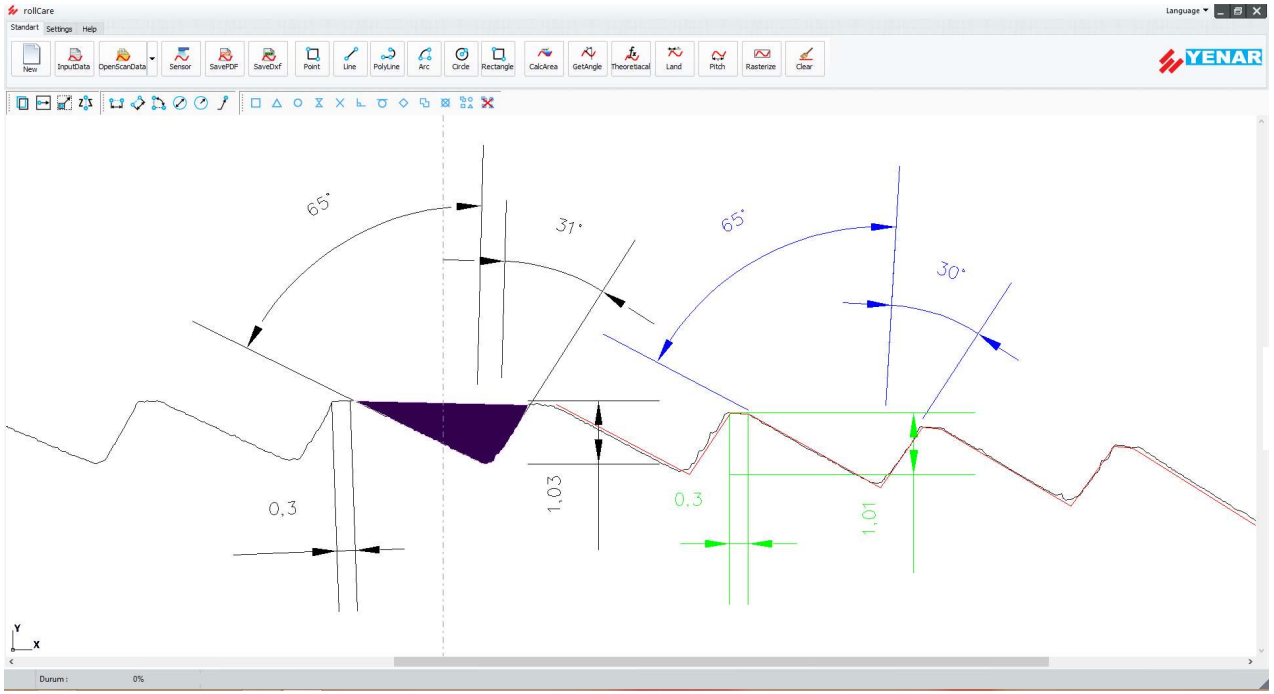

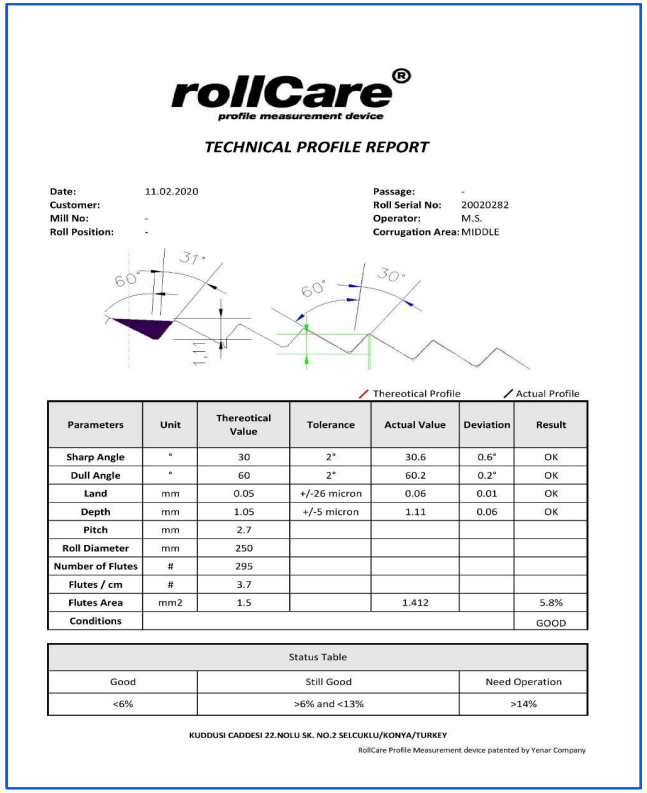

rollCare®
profile measurement device

TECHNICAL PROFILE REPORT

Date: 11.02.2020
Customer:
Mill No: -
Roll Position: -
Passage: -
Roll Serial No: 20020282
Operator: M.S.
Corrugation Area: MIDDLE

Thereotical Profile / Actual Profile

Parameters	Unit	Thereotical Value	Tolerance	Actual Value	Deviation	Result
Sharp Angle	°	30	2°	30.6	0.6°	OK
Dull Angle	°	60	2°	60.2	0.2°	OK
Land	mm	0.05	+/-26 micron	0.06	0.01	OK
Depth	mm	1.05	+/-5 micron	1.11	0.06	OK
Pitch	mm	2.7				
Roll Diameter	mm	250				
Number of Flutes	#	295				
Flutes / cm	#	3.7				
Flutes Area	mm2	1.5		1.412		5.8%
Conditions						GOOD

Status Table		
Good	Still Good	Need Operation
<6%	>6% and <13%	>14%

KUDDUSI CADDESI 22.NOLU SK. NO.2 SELCUKLU/KONYA/TURKEY

RollCare Profile Measurement device patented by Yenar Company

Technical Feature

- Wear out Profiles

Theoretical Profile (Should be) Actual Profile (Real)

%0 Wear Out of profile

%100 Correct New Corrugated Profile according to flow sheet

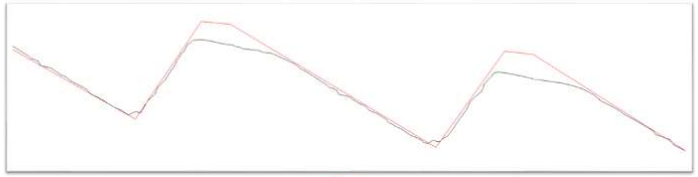

Theoretical Profile (Should be) Actual Profile (Real)

%20 Wear Out of profile (used roll)

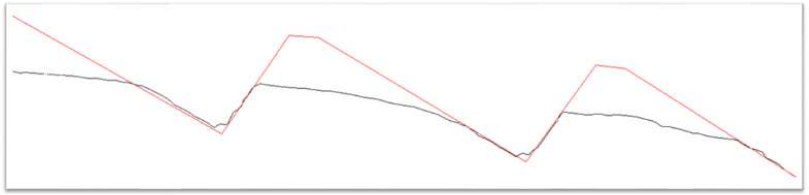

Theoretical Profile (Should be) Actual Profile (Real)

%60 Wear Out of profile (used roll)

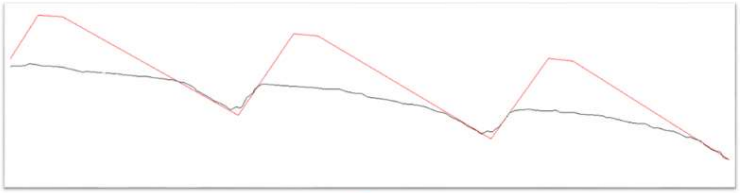

Theoretical Profile (Should be) Actual Profile (Real)

%80 Wear Out of profile (used roll)

rollCare®
profile measurement device

Technical Feature

- For example, the green line is use for break 1 and starts from 10 power x hour / kg in 0% corrugation wear. After a while the corrugation wear percentage is increasing up to 75% on graph and you have to squeeze the rolls so force for B1 and power are increasing.

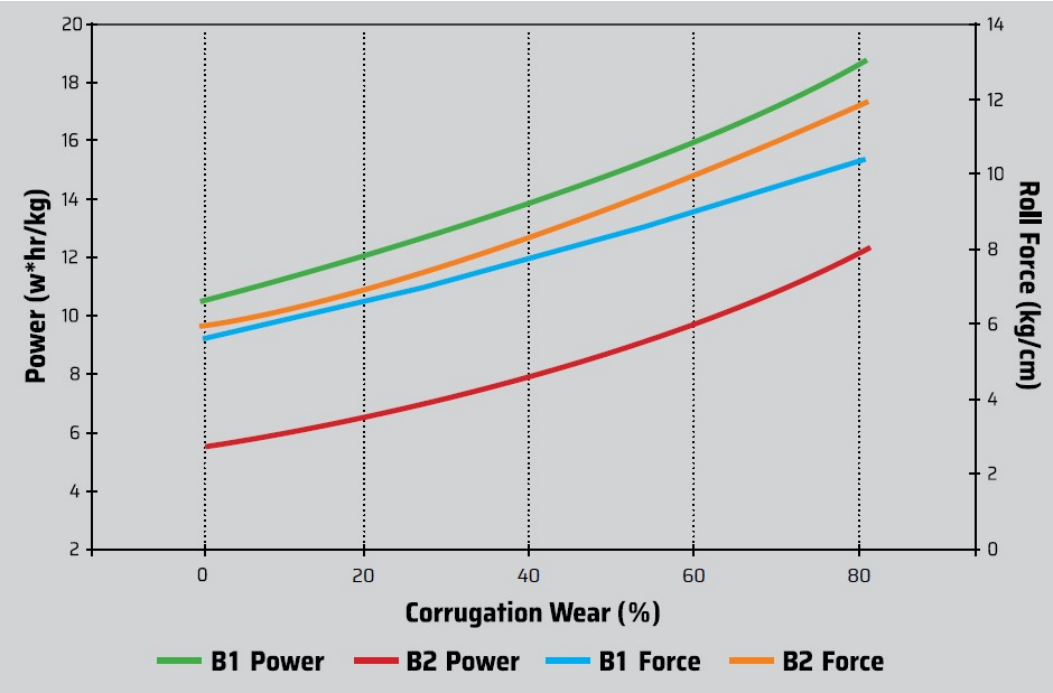

rollCare®
profile measurement device

Conclusion and Learnings

WHY ROLLCARE

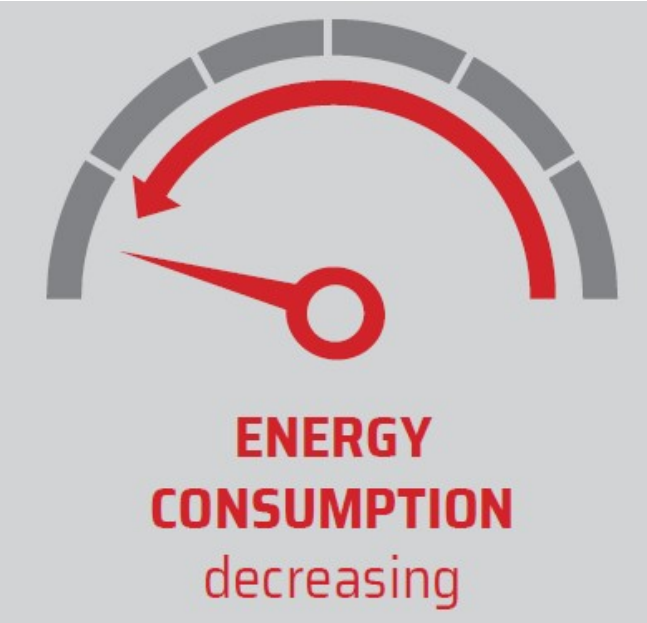

rollCare®
profile measurement device

Conclusion and Learnings

THANK YOU!

Sefa Yegin

Area Sales Manager – Yenar

Konya OSB Kuddusi Caddesi 22. Sokak No.2 Selcuklu, Konya, Turkey

info@yenar.com.tr / sefa@yenar.com.tr